FCA38001－R.3412.A

作成承認印	配布許可印
ニコン カメラ CS推進部 GM	計画課 M

EF 300 FCA 38001
EF 300 QD FCA 38201
Nice Touch 4 FCA 38101
Nice Touch 4 QD FCA 38301

REPAIR MANUAL

Nikon | NIKON CORPORATION
Tokyo, Japan

Copyright © 1996 by Nikon Corporation.
All Rights Reserved.

Printed in Japan September 1996

〔1〕 SPECIFICATIONS

TYPE OF CAMERA :

Type :	35mm Lens-shutter camera

LENS :

Focul distance :	29mm
Brightness :	F4.5
Construction :	3 elements in 3 groups
Shooting distance :	1.5m to infinity

EXPOSURE :

Shutter type :	Behind-the-lens mechanical shutter
Shutter speed :	1/125 sec. fixed (1/75 ~ 1/145)
Film setting :	Automatic (DX ISO 100/400) (Non DX ISO 100)
Sensor module :	Cds
Aperture :	F4.5 fixed

FINDER :

Method :	Reverse-galilean albada bright-frame finder
Frame coverage :	80 % (at 3m)
Diopter :	-1 (at infinity)
Magnification :	0.45 x

FLASH :

Guide number :	8 (ISO 100・m / at 30 sec. after recharge completed)
Automatic flash level :	LV10 (ISO 100) , LV9 (ISO 400)
Red-eye-Reduction function :	built-in Lamp "ON" during a release buttom pushing half-way.
Display of completion of recharge :	Shown by green LED light positioned in the right side of a finder.
Recycling time :	Approx. 6 sec.

POWER SOURCE :

Power source :	AA battery (two pcs) in Alkaline or Manganese (Ni-cd Battery not acceptable)

DIMENSIONS :

Without data back :	118mm x 65mm x42mm
With data back :	118mm x 65mm x 46.5mm

WEIGHT (without battery) :

Without data back :	165g
With data back :	173.5g

⚠ WARNING

- There are high voltage parts inside. Be careful of this electric shock, when you remove the cover.
- You must discharge the main condenser according to the instruction of this repair manual after you remove the front cover.

〔DISCHARGING OF THE MAIN CONDENSER〕

・Discharge the main condenser from both ends of flash tube or between the terminals of the main condenser.

・Use a discharge resistor of apporx. 2K Ω /5W.

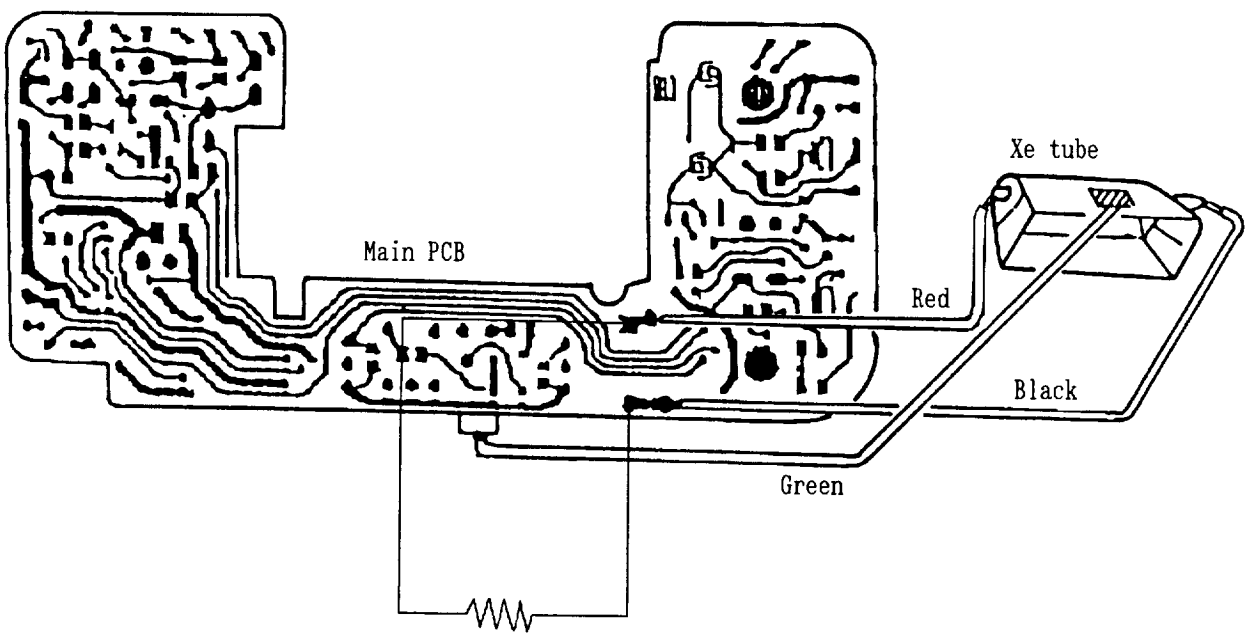

Note : Basically the body exchange is to be adopted when the repair is necessary, and only the cosmetic parts are prepared to supply. Accordingly, this repair manual does not include the chapters for disassembling and assembling.

〔2〕 CHECKING AND ADJUSTMENT

1. BACK FOCUS

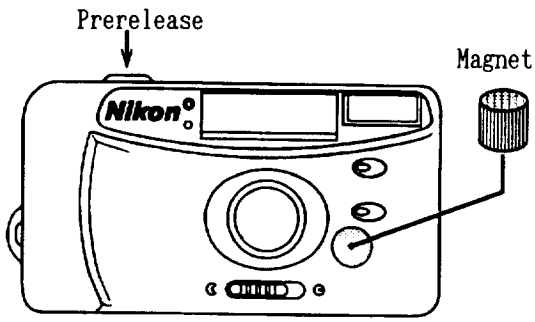

①Set the Flat Mirror to the Aperture part.
②Set the magnet with strong magnetism to the place as shown left.
Press the shutter halfway to make the shutter blade opened.
When the magnetism is weak, remove the front cover before pressing the shutter.
③Confirm if the value of Collimator (J19019) is within range of standard.
When the value is out of standard, turn the photo lens to adjust until the value come into the range of standard.

Standard range : -10 ± 3mm

2. AUTOMATIC FLASH LEVEL

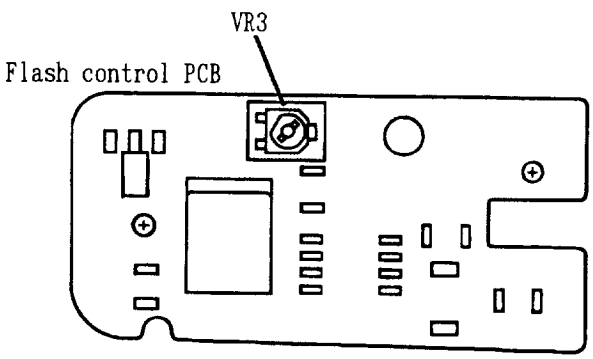

VR3 : Level of Flashing at low brightness

	ISO 100	ISO 400
FIRING	LV 10	LV 9
OFF	LV 12	LV 11

WIRING DIAGRAM

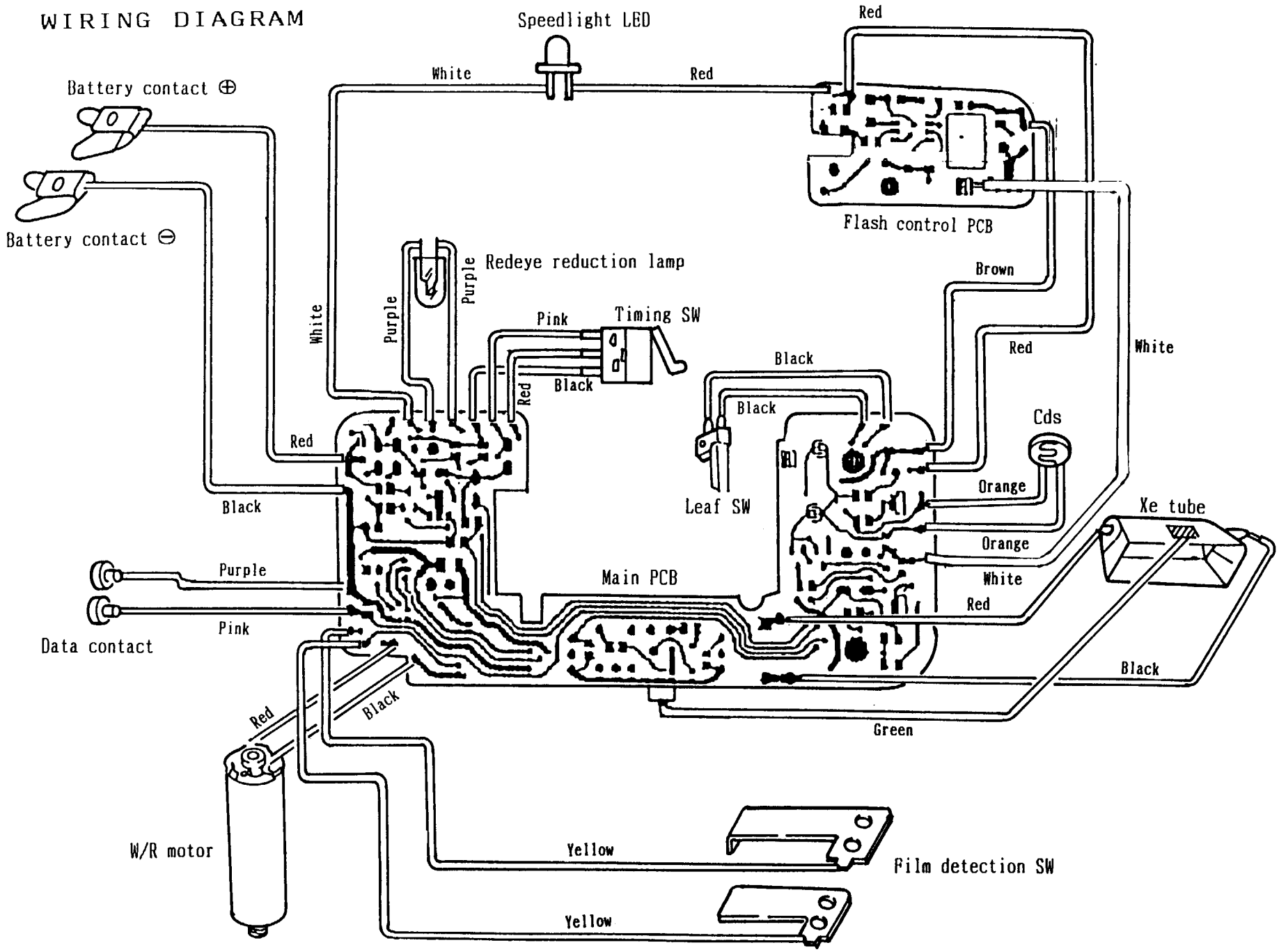

FCA38001-R. 3412. A

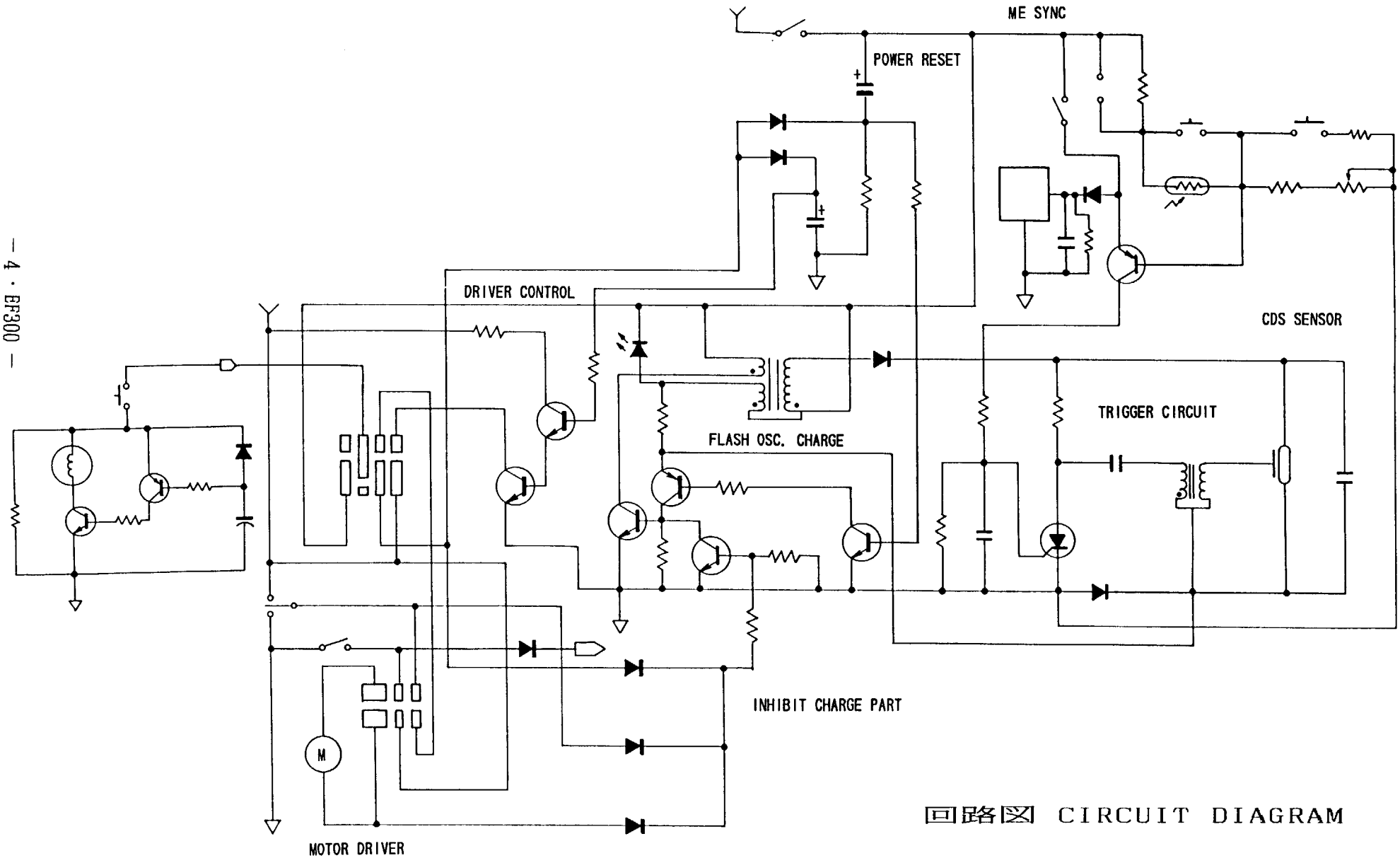

回路図 CIRCUIT DIAGRAM

FCA38001-R. 3412. A

作成承認印	配布許可印
ニコン カメラ CS推進部 GM	パーツ センター M

EF 300 FCA 38001
EF 300 QD FCA 38201
Nice Touch 4 FCA 38101
Nice Touch 4 QD FCA 38301

PARTS LIST

Nikon | NIKON CORPORATION
Tokyo, Japan

Copyright © 1996 by Nikon Corporation.
All Rights Reserved.

Printed in Japan September 1996

展開図 Exploded Drawings

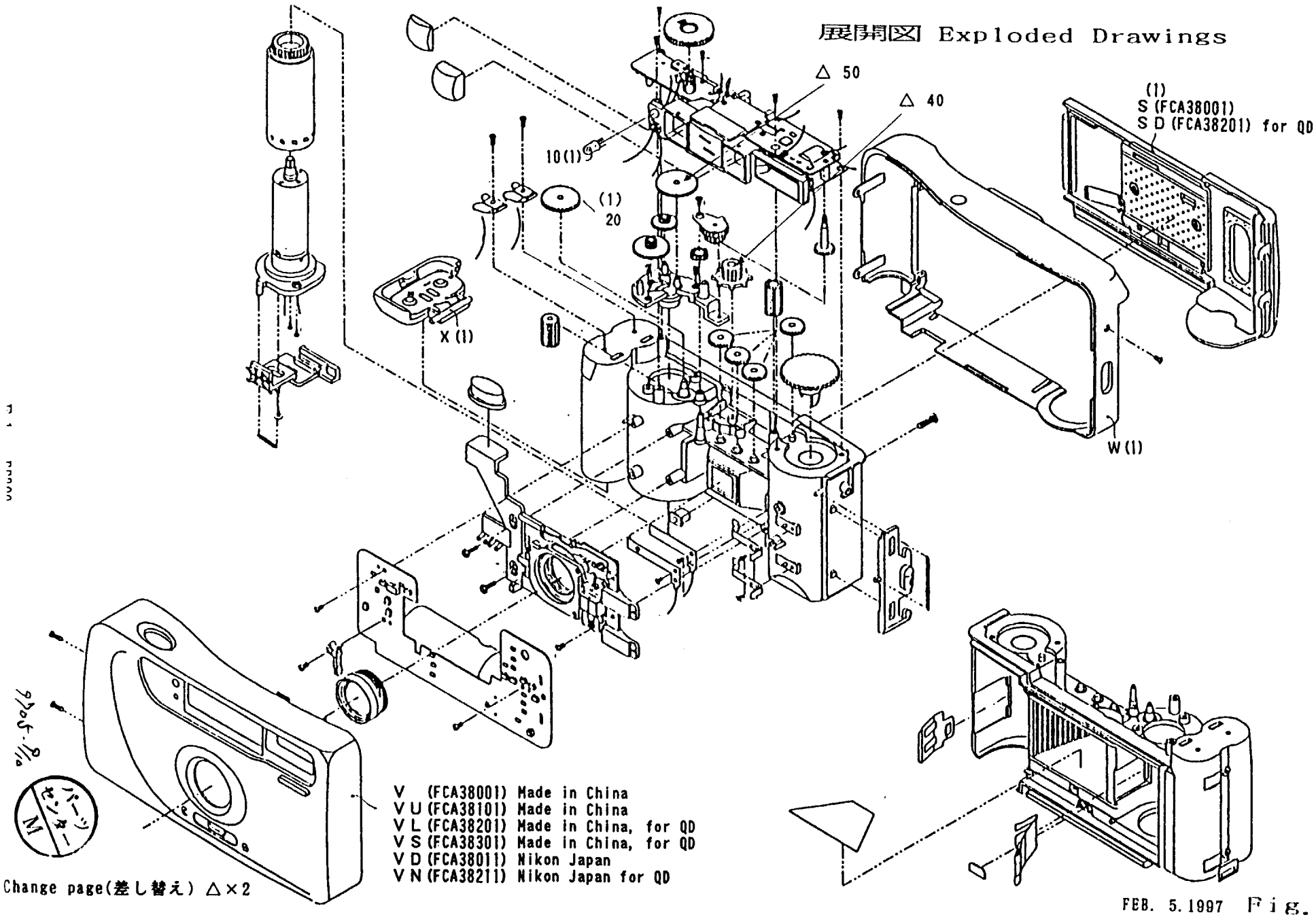

Change page(差し替え) △×2

FEB. 5.1997 Fig. 1

部品表 Parts List

FCA38001-R. 3412. A

	部品番号 Part No	補助番号 Ckt. No.	名称 Name	1台分個数 Pcs. Per Unit	部組品番号 Assembly	参照図番 Fig.	販売区分 Term of Delivery	備考 Remarks	要求単位 Q'ty per order
	* 10 (FCA35001-10)		赤目ランプ LAMP PREVENT RED EYE	1		1	○		1
	* 20 (FCA35001-20)		ギア No. 4 GEAR No. 4	1		1	○		1
△	* 40 (FCA35001-40)		ギア No. 9 GEAR No. 9	1		1	○	RP-9705	1
△	* 50 (FCA35001-50)		ギア No. 3 GEAR No. 3	1		1	○	RP-9705	1

Change Page (差し替え) △×2

FBE. 05. 1997

パーツセンター M

9705-1/10

部組品表 Assembly List

FCA38001-R. 3412. A

部品番号 Part No.	補助番号 Ckt No.	名　称 Name	1台分個数 Pcs. Per Unit	構成部品番号 Main assembly No.	参照図番 Fig. No.	備　考 Remarks	要求単位 Q'ty per order
* S (FCA37001-S)		裏蓋部組 CAMERA BACK UNIT	1		1		1
V (FCA38001-V)		前カバー部組 FRONT COVER UNIT	1		1	MADE IN CHINA	1
* W (FCA37001-W)		後カバー部組 REAR COVER UNIT	1		1		1
* X (FCA37001-X)		電池蓋部組 BATTERY CHAMBER LID UNIT	1		1		1

部組品表 Assembly List

FCA38011-R. 3412. A

部品番号 Part No.	補助番号 Ckt No.	名　称 Name	1台分個数 Pcs. Per Unit	構成部品番号 Main assembly No.	参照図番 Fig. No.	備　考 Remarks	要求単位 Q'ty per order
VD (FCA38011-VD)		前カバー部組 FRONT COVER UNIT	1		1	NIKON JAPAN	1

部組品表 Assembly List

FCA38101-R. 3412. A

部品番号 Part No.	補助番号 Ckt No.	名　称 Name	1台分個数 Pcs. Per Unit	構成部品番号 Main assembly No.	参照図番 Fig. No.	備　考 Remarks	要求単位 Q'ty per order
VU (FCA38101-VU)		前カバー部組 FRONT COVER UNIT	1		1	MADE IN CHINA 北米仕様 (FOR NORTH AMERICA)	1

部組品表 Assembly List

FCA38201-R. 3412. A

部品番号 Part No.	補助番号 Ckt No.	名　称 Name	1台分個数 Pcs. Per Unit	構成部品番号 Main assembly No.	参照図番 Fig. No.	備　考 Remarks	要求単位 Q'ty per order
VL (FCA38201-VL)		前カバー部組（QD） FRONT COVER UNIT (QD)	1		1	MADE IN CHINA	1
* SD (FCA37201-SD)		裏蓋部組（QD） CAMERA BACK UNIT (QD)	1		1		1

部組品表 Assembly List

FCA38211-R. 3412. A

△ 部品番号 Part No.	補助番号 Ckt No.	名称 Name	1台分個数 Pcs. Per Unit	構成部品番号 Main assembly No.	参照図番 Fig. No.	備考 Remarks	要求単位 Q'ty per order
VN (FCA38211-VN)		前カバー部組（QD） FRONT COVER UNIT (QD)	1		1	NIKON JAPAN RP-9629	1

Change page(差し替え) △×1

SEP. 17. 1996

部組品表 Assembly List

FCA38301-R. 3412. A

部品番号 Part No.	補助番号 Ckt No.	名　称 Name	1台分個数 Pcs. Per Unit	構成部品番号 Main assembly No.	参照図番 Fig. No.	備　考 Remarks	要求単位 Q'ty per order
VS (FCA38301-VS)		前カバー部組（QD） FRONT COVER UNIT (QD)	1		1	MADE IN CHINA 北米仕様 (FOR NORTH AMERICA)	1